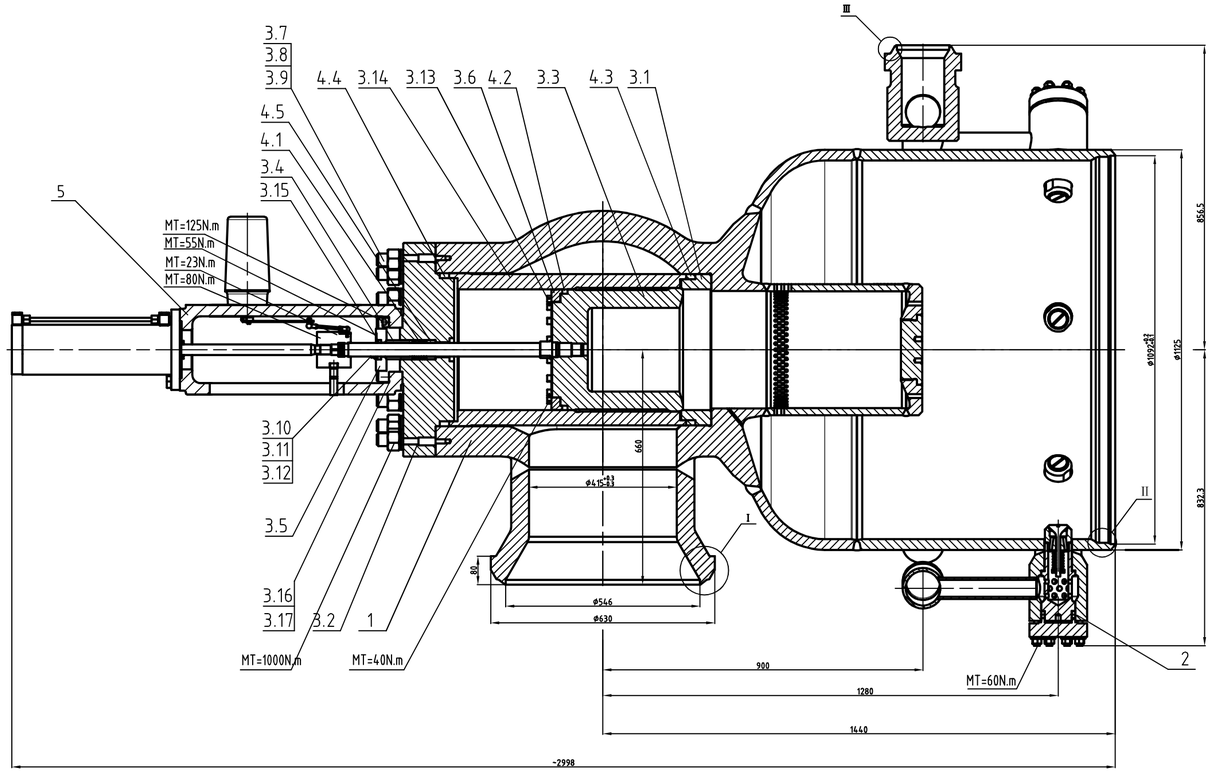

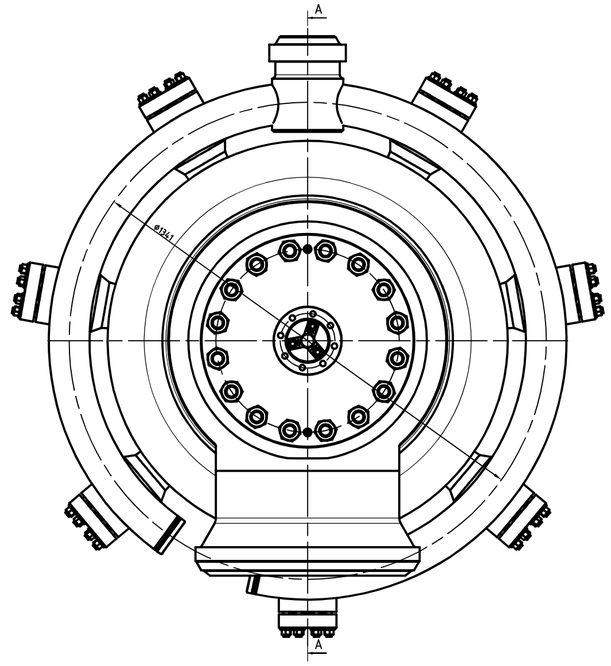

I
1:4

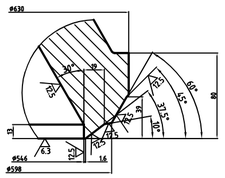

II
1:2

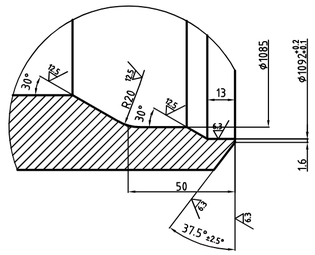

III
1:2

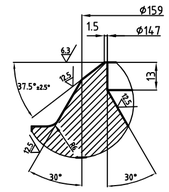

技术规范
1. 公称通径 DN 550/1100 mm
2. 最大行程 h 252±5% mm

TECHNICAL SPECIFICATION:
1. NOMINAL DIAMETER DN 550/1100 mm
2. STROKE h 252±5% mm

技术要求
1. 强度试验压力 进口19.24 Mpa(192.4Kg/cm^2) 出口2.52 Mpa(25.2Kg/cm^2)
密封试验按ANSI/FCI 70-2 V级：试验压力 2.8Mpa(28Kg/cm^2) 最大泄漏量：2.84毫升/分钟
介质 水
2. 阀杆螺纹及中法兰螺纹连接处涂适量Molykote1000化合剂。
3. 阀门应能随管道自由膨胀，阀体上不允许焊接固定支架或它物来承受管道拉力。
4. 图纸所有尺寸单位为mm。

TECHNICAL REQUIREMENTS
1. BODY HYDROSTATICAL TEST PRESSURE INLET 19.24 Mpa(192.4Kg/cm^2)
LEAKAGE PER ANSI/FCI 70-2 V : SEAL TEST PRESSURE 2.8Mpa(28Kg/cm^2) MAX. LEAKAGE:2.84ml/min
MEDIUM WATER
2. THE THREAD FACE OF STEM AND ALL FLANGE MUST BE COATED CHEMICAL COMPORD MOLYKOTE 1000.
3. VALVE CAN FREE MOVE FOLLOW WITH PIPE SYSTEM,NO EXTRA LOAD OR FIXED SUPPORT
ARE ALLOWED WELDDING IN THE BODY.
4.ALL DIMENSIONS ARE IN mm.

序号 NO.	图号 DWG.NO.	名称 DESCRIPTION	数量 QTY.	材料 MAT.	单重 SINGLE WT.	总重 TOTAL WT.	备注 REMARKS
5	ASME-125	液压执行器 actuator	1				
4.5	320400095	填料座 packing seat	1	Carbon			
4.4	000.003.158.903	密封圈seal ring	1	Reingraphit			
4.3	000.003.158.902	密封圈 seal ring	1	Reingraphit			
4.2	255591151	密封圈 seal ring	1	GRAPH-LOCK			
4.1	255600081	填料组件 packing	1	Garlock 9000 EVSP			

序号 NO.	图号 DWG.NO.	名称 DESCRIPTION	数量 QTY.	材料 MAT.	单重 SINGLE WT.	总重 TOTAL WT.	备注 REMARKS
3.17	103.158.315.500	垫片 washer	8	X39CrMo17-1			
3.16	000.003.176.629	螺栓 bolt	8	21CrMoV5 7-zn 16 D			DIN 912-M18-Tx75
3.15	000101007497	盘根 packing	1	石墨 Graphite			
3.14	103.221.554.500	节流圈 throttle sleeve	1	X20CrMoV11-1		207.1	
3.13	103.221.612.500	螺栓 bolt	16	X22CrMoV12-1+QT1	0.16	2.56	M12-Tx40
3.12	103.193.793.500	垫片 washer	3	X2CrNiMo17-12-2	0.005	0.015	
3.11	000.003.148.315	螺母 nut	3	25CrMo4	0.015	0.045	DIN 2510-NF M16
3.10	103.165.738.500	双头螺栓 bolt	3	21CrMoV 5 7-zn 16 D	0.17	0.51	M16-Tx90(110)
3.9	103.158.315.500	垫片 washer	16	X39CrMo17-1	0.084	1.344	
3.8	000.003.148.338	螺母 nut	16	25 CrMo4	0.5	8	DIN 2510-NF M36
3.7	103.227.655.500	双头螺栓 bolt	16	X22CrMoV12-1+QT1	1.74	27.84	M36-Tx220
3.6	103.221.560.500	压环 retainer ring	1	X20 CrMoV 11 1		6.54	
3.5	103.228.276.500	压 盖 clamp plate	1	SA182 F22 CL3		2	
3.4	322400081	填料盖 gland	1	410SS		0.62	
3.3	103.229.599.500	阀杆装配 plug ASS	1			161	
3.2	N09.000.006.500	阀 盖 bonnet	1	SA182 F22 CL3		234	
3.1	103.221.553.500	阀 座 seat	1	X20CrMoV11 1		28.2	
2	S030555	喷嘴组件nozzle	7		7	49	OP-5630 L=80
1	N01.000.016.500	阀体及减温器body&dam	1			2708.5	

FOR APPROVAL

REV.	DESCRIPTION	DATE	DESIGNED BY	CHECKED BY	REVIEVWED BY	APPROVED BY

OWNER: EVNTPMB3 — POWER GENERATION CORPORATION 1
THERMAL POWER PROJECT MANAGEMENT BOARD 3

CONSULTANT: EVNPECC3 — POWER ENGINEERING CONSULTING JOINT STOCK COMPANY 3

CONTRACTOR: THE CONSORTIUM OF CHENGDA-DEC-SWEPDI-ZEPC

SUBCONTRACTOR: SHANGHAI CCI POWER CONTROL EQUIPMENT CO.,LTD

PROJECT : DUYEN HAI 3 THERMAL POWER PLANT PROJECT

CONTRACT NO: DH3-05082011

DRAWING NAME: 低压旁路阀 LP BYPASS VALVE

PROJECT CONTROL NO: DH3-31MAP11AA001/31MAP12AA001-M-PSC-0004

DRAWING NO : NBSE 60-600

REV: 0

更改标记 REV.MRK	数量 QTY.	文件号 DOC. NO.	签字 SIGN.	日期 DATE

描图 TRAC.
描校 CHECK
底图编号 BASE DWG. NO.
签字 SIGN.
日期 DATE

设计 DES.
校对 CK.
审核 REV.
审定 VER.
标检 STD.CK.
工艺 TEC.
批准 APPRD
签字 SIGN. 日期 DATE

低压旁路阀
LP BYPASS VALVE

上海希希埃动力控制设备有限公司
SHANGHAI CCI POWER CONTROL EQUIPMENT CO.,LTD

项目 PRO.
版本 VER.
第 张 共 张 SHEET OF
重量 WT. 3437
比例 SCALE 1:12
图号 DWG.NO. NBSE 60-600